Specification Sheet

Caspian

Category

Freestanding Bath Tub

Code

KBT-3-1400

Material

Sanitary Grade Acrylic

High Gloss Finish

Size

1390 x 715 x 585mm

Colours

White

Inclusions

Self Supporting Steel Frame

Waste not included

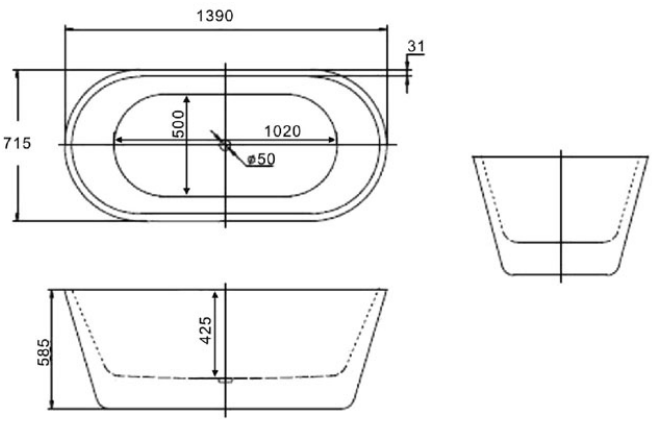

See the complete range at:
www.buildersworld.com.au

NOTE: Product dimensions are approximate and can vary slightly due to manufacturing variances. Information provided in this data sheet is representative of the product available at the time and date of printing, 11/08/2016. Builders World Pty Ltd reserves the right to vary specifications at any time without notice.

[D]
DOMESTIC APPLICATIONS
7 year replacement Warranty against faults in manufacture.

[C]
COMMERCIAL USE WARRANTY
1 year parts & replacement (unless extended Warranty provided in writing by Builders World).

[O]
OUTDOOR APPLICATIONS
Warranty does not cover products used for outdoor applications.

Note: Maximum hot water temperature 70 degree Celsius. Use of abrasive cleaners will void warranty. Bath should only be cleaned with a mild domestic cleaner, soft soap suds or a specifically formulated cleaner for acrylic.

Refer to Warranty Sheet for Warranty Conditions and Cleaning Recommendations.